Failure Cause Analysis and Maintenance Strategy of Centrifugal Pump

1_Basic Structure of Centrifugal Pump

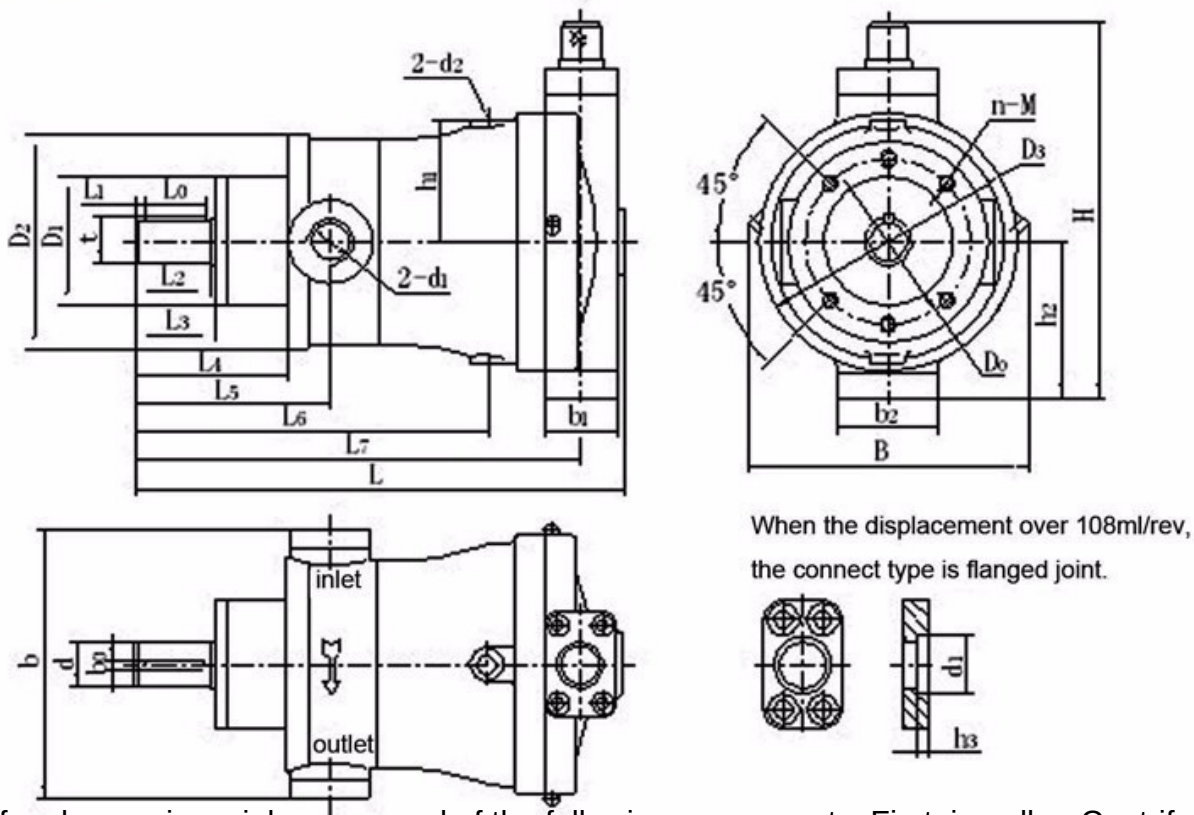

Centrifugal pump is mainly composed of the following components: First, impeller. Centrifugal pump mainly works on liquid through impeller, which has many impeller types. One is open impeller. Its working efficiency is relatively low. It is mainly used to transport suspended solids containing granular liquids. The other is semi-closed impeller. Its efficiency is slightly higher than that of open impeller, and it is mainly used to transport suspended solids containing solids. Liquids; the other is the most efficient closed impeller, which conveys generally clean liquids. Second, the shaft and bearing. The two ends of the centrifugal pump shaft are respectively connected with the coupling and impeller. According to the load of the centrifugal pump, there are two choices: sliding bearing and rolling bearing. Third, pump housing. Centrifugal pump housing is the load of equipment operating pressure, which can be divided into two types: axial and radial partition. The shell shapes of single-stage pump and multi-stage pump are very different. The former is volute type, and the latter is circular or annular. Fourth, the shaft encapsulation device. The function of the shaft encapsulation device is to prevent the outside air from entering the pump housing and the liquid leakage inside the pump. Fifth, sealing ring. Sealing ring exists on the impeller cover plate and pump shell. Its material has high wear resistance. If it is used for a long time, it should be replaced in time. The main function of sealing ring is to prevent leakage of liquid in centrifugal pump.

2_Maintenance process of centrifugal pump

Regular maintenance of centrifugal pumps is an important way to ensure that they are in good working condition and prolong their service life. Before the maintenance, technicians should deal with the repair operation ticket, implement the energy isolation measures in place, check whether the centrifugal pump can be safely handed over, and in the process of dismantling the centrifugal pump, dismantle the bearing bush, oil seal, front and rear bearing racks in turn until the centrifugal pump finally disintegrates completely. Then check the shell of centrifugal pump at all levels, check and clean the bearing and oil seal, and find that the problem should be solved in time. After repair, centrifugal pump is assembled, pump body, bearing and structural components are assembled. The final step is to refill the pump body, assemble the coupling and various auxiliary pipelines, clean the installation site, and test the centrifugal pump.

3_Centrifugal Pump Fault Analysis and Countermeasure

3.1_Centrifugal Pump Start-up Problems

Causes of problems in starting centrifugal pumps and countermeasures are as follows:

First, there may be abnormal power supply of centrifugal pumps, technicians should conduct a comprehensive inspection of the power supply to eliminate power failure. Secondly, the centrifugal pump may be stuck, technicians should check the coupling, when necessary, the centrifugal pump can be disassembled and repaired. Thirdly, if the filling is too solid, it can be relaxed. Fourth, check whether the discharge valve is closed. If it is not, restart the centrifugal pump after closing. Fifth, dredge the balanced water pipe.

3.2_Centrifugal pump discharges fluid poorly

Gas left in the centrifugal pump, insufficient irrigation pump, incorrect rotation direction of centrifugal pump, insufficient speed or high suction height are all the reasons leading to poor drainage of centrifugal pump. In this regard, technical personnel can take measures as follows: first, re-irrigation pump; second, check whether the centrifugal pump steering is correct; third, properly improve the speed of the pump; fourth, remove impurities attached to the filter; fifth, properly reduce the suction height, check whether the suction tank is in a vacuum state, to avoid long-term steam generation. Corrosion phenomenon.

3.3_Large power consumption during operation

The reasons and Countermeasures for the high power consumption of centrifugal pumps are as follows: first, the friction between impeller and shell and wear-resistant ring is too large; second, the liquid density in the pump is too high; third, the packing is too tight; fourth, the pump shaft is bent; fifth, the coupling is not well aligned; sixth, the failure of the axial force balancing device. Seventh, bearing damage. The countermeasures are as follows: applying lubricant to reduce the friction between impeller and components, if the wear is too large, it should be replaced in time; checking the liquid density in the pump to reduce its density appropriately; loosening the packing to prevent it from pressing too tightly; correcting the pump shaft; carrying out the middle

treatment of the coupling; checking the balance hole and whether the water pipe is unblocked; Regular maintenance and repair of bearings.

3.4_Centrifugal Pump Bearing Heating

When the centrifugal pump is in normal operation, if the bearing heating occurs, it can be caused by the following reasons: the bearing clearance is not standard; the lack of lubricating oil; the bearing wear is too large. The effective countermeasures are as follows: if bearing wear is too large or tile scraping is not qualified, it is necessary to re-scrape or even replace bearings, reinforce loose parts; increase the use of lubricating oil or replace lubricating oil with higher lubricity.

4, concluding remarks

In summary, centrifugal pumps play a very important role in China's industrial development, especially in the chemical industry. If the centrifugal pump fails in normal operation, it will inevitably affect the smooth operation of production, greatly increase production costs, and bring serious economic losses to enterprises. Technicians should be fully familiar with the basic structure of centrifugal pumps, master the whole maintenance process of centrifugal pumps, pay attention to the operation status of each component. Once problems are found, they should report and solve the problems in time. The service life of each component of centrifugal pumps is life-span, and the parts should be replaced in time beyond the service life, so as to maximize the use of centrifugal pumps. Guarantee the smooth progress of production and operation in our country within limits